SN. . . . . .

Dr. Jekill & Mr. Hyde®

THE EXHAUST

MANUAL : **BMW® | EASYMOUNT | SMARTBOX 2**

NEW IN THIS MANUAL:
- 2019 MODEL

R 1250 RT

2019 » Up

R 1250 RT
Easymount Smartbox 2

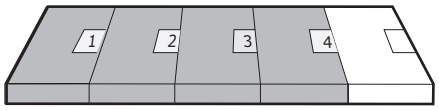

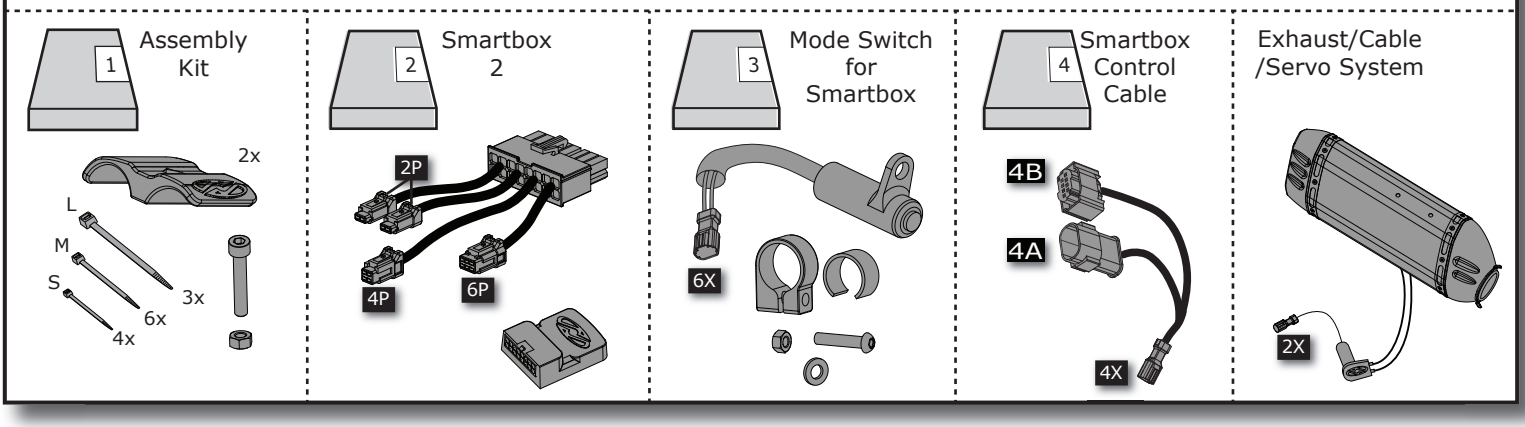

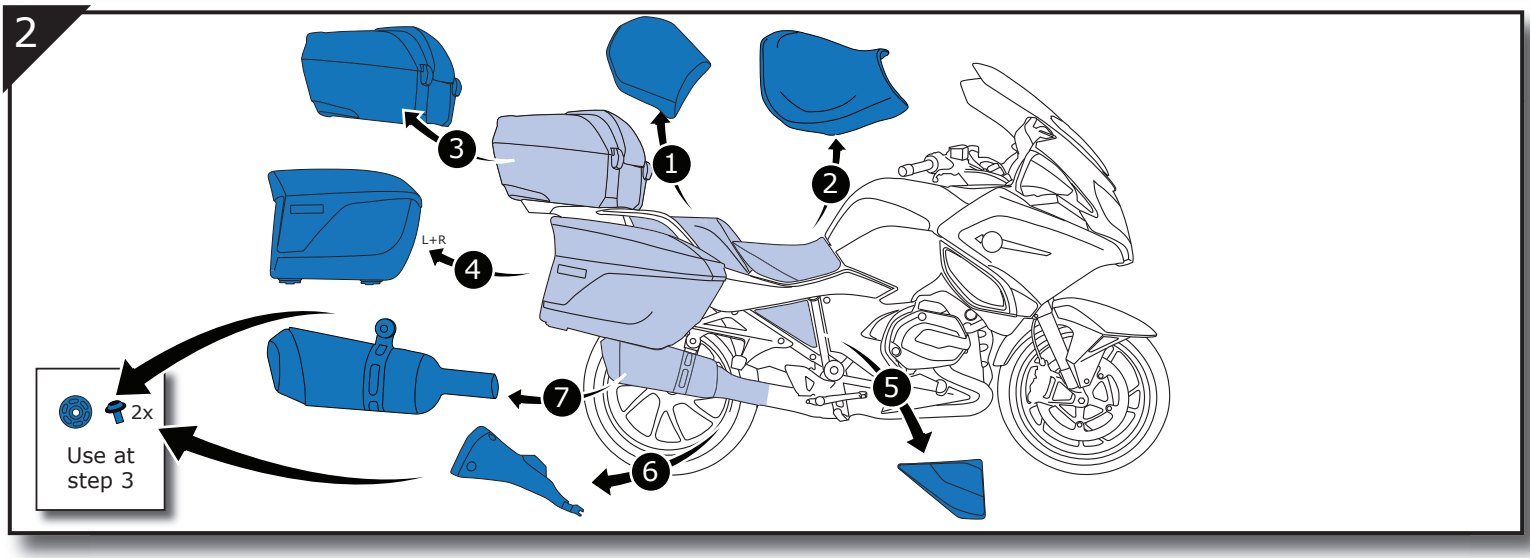

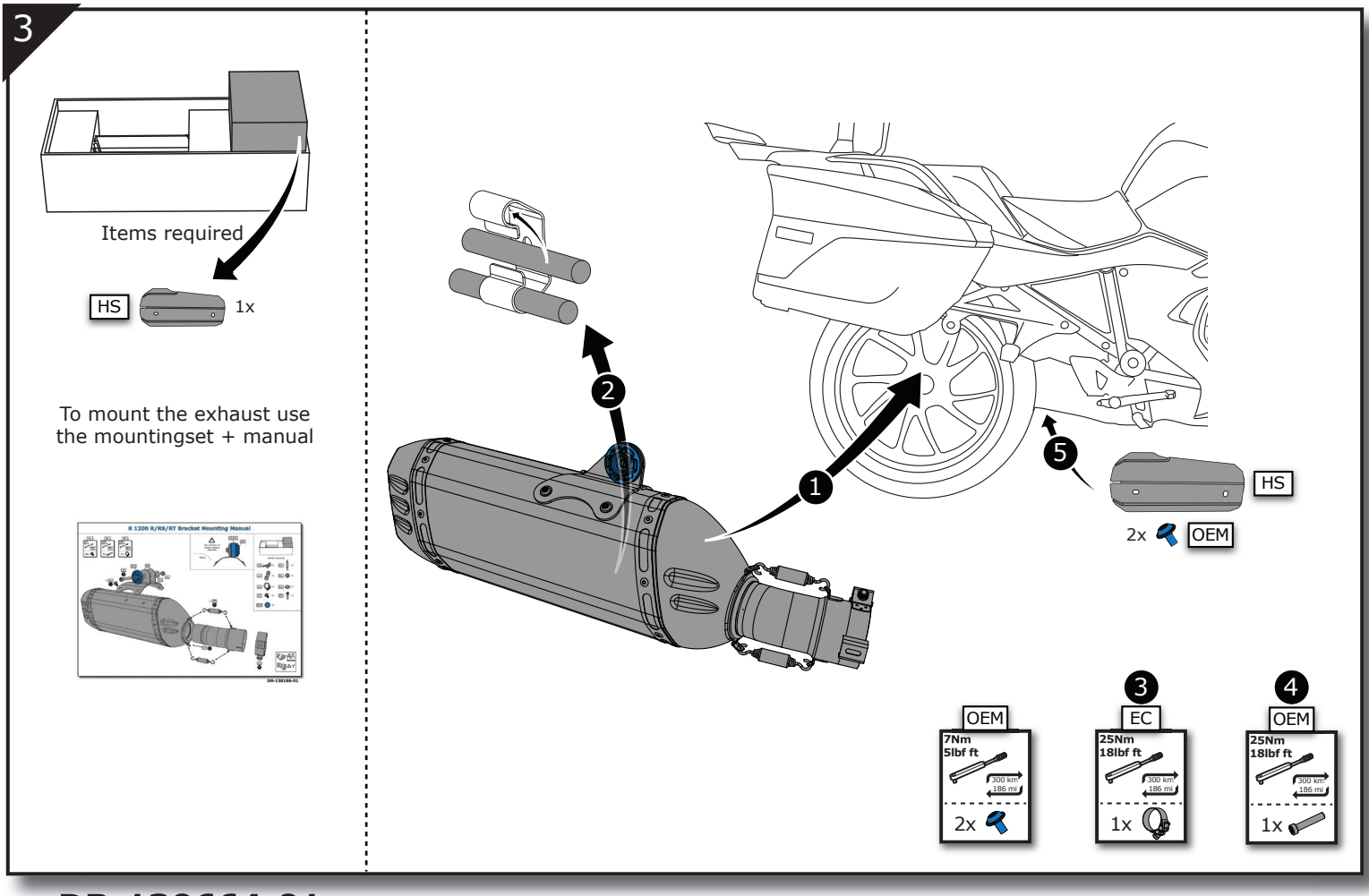

4

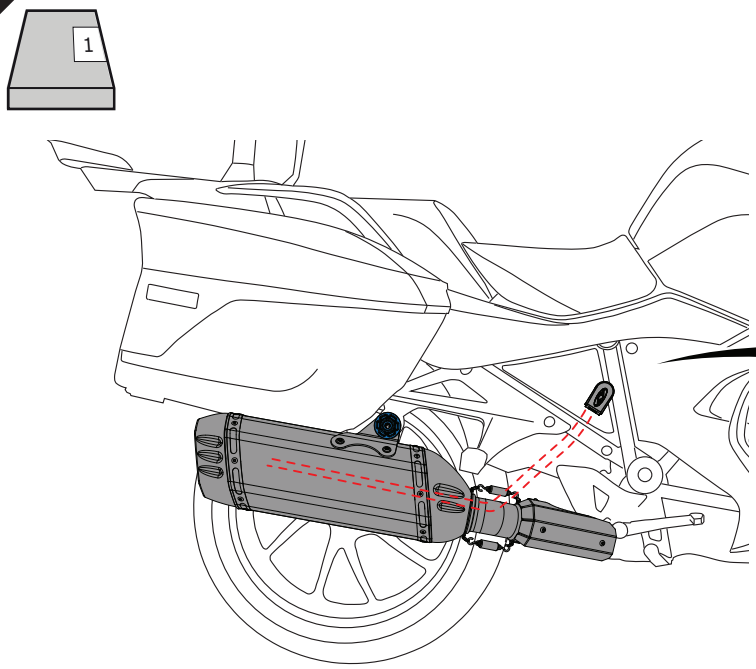

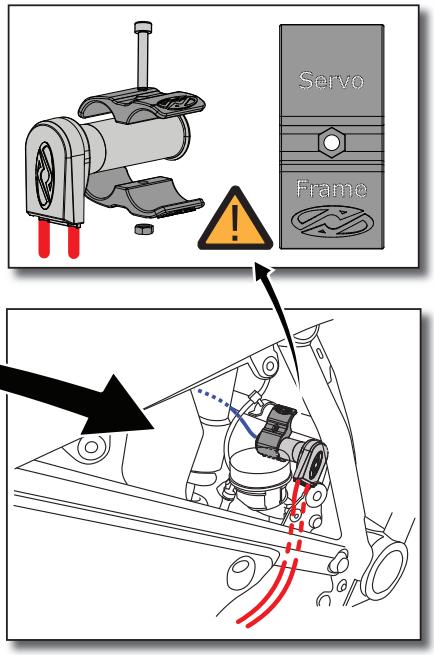

Cable routing
& connecting

step 9

5

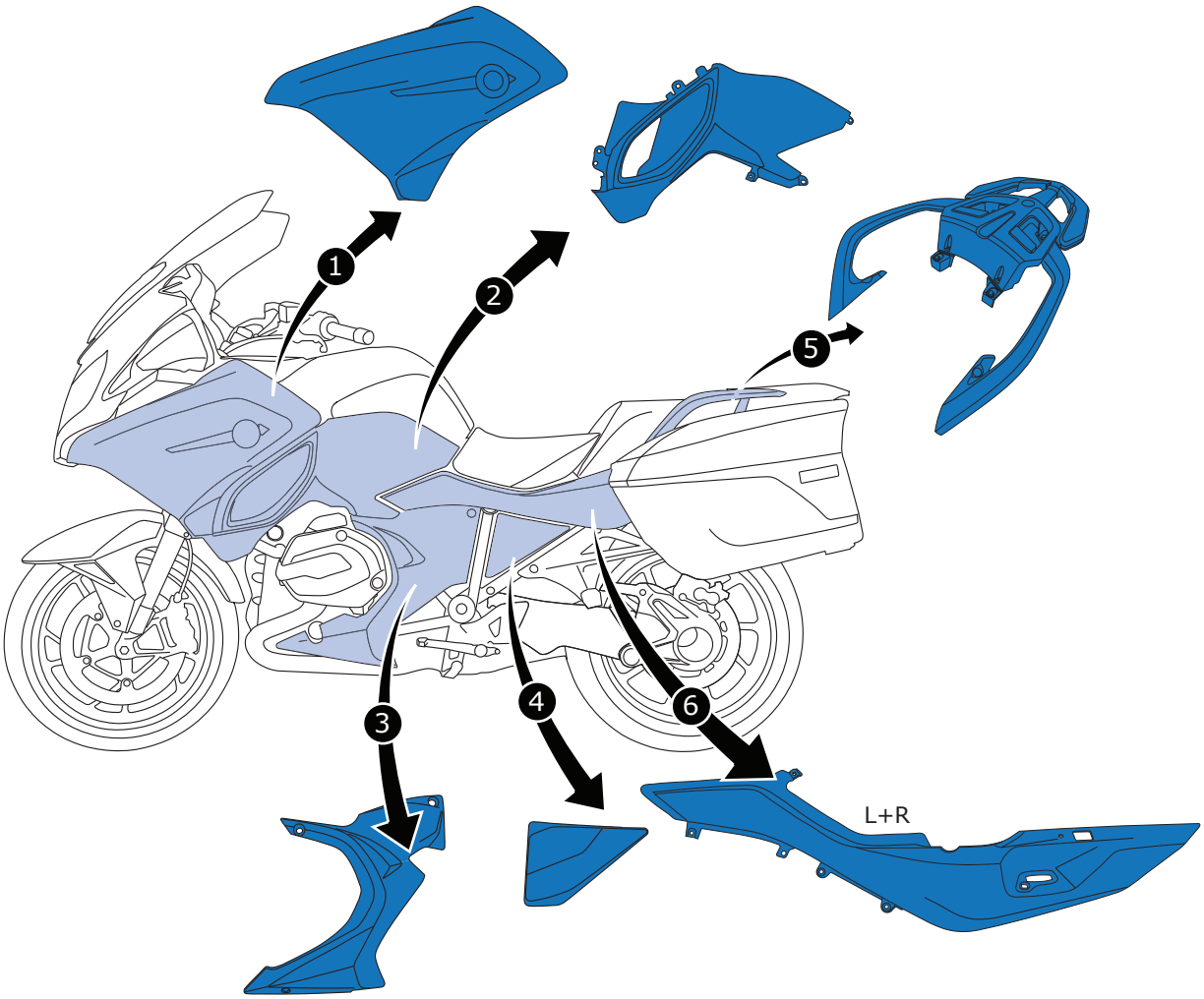

6

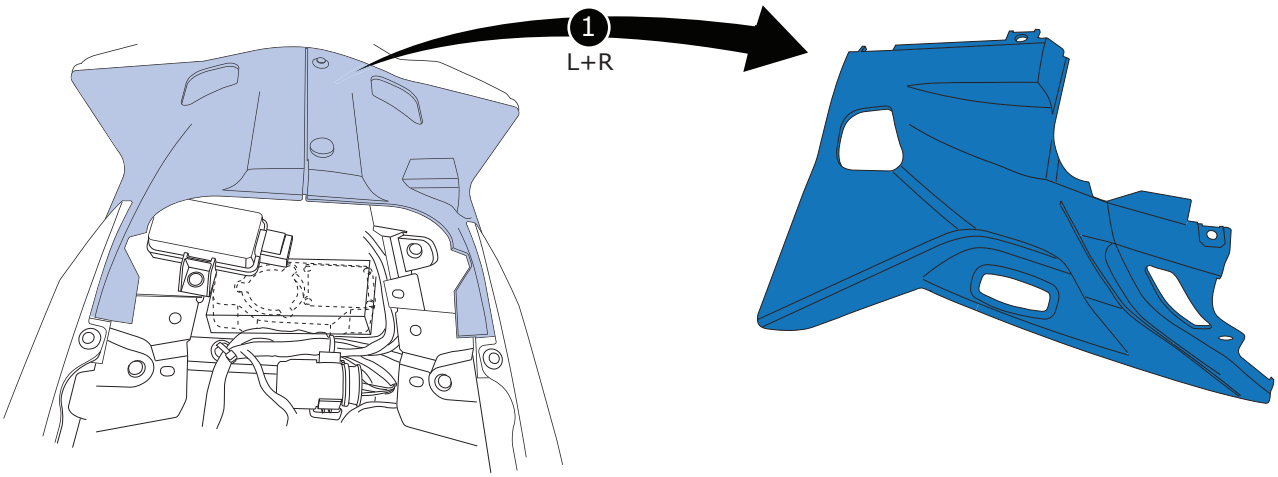

7

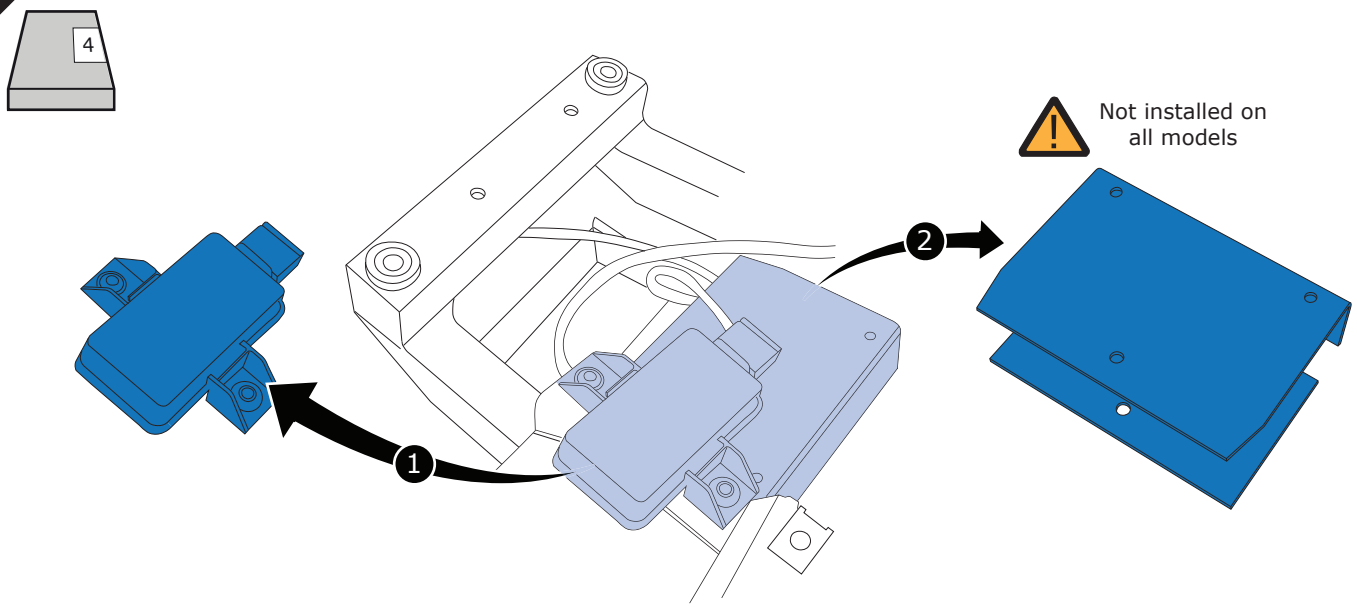

Current situation

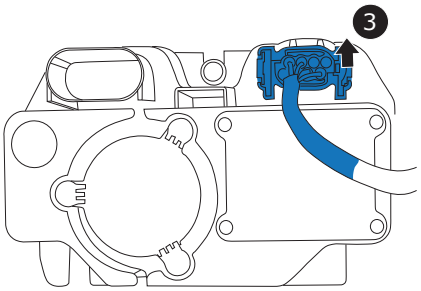

Connect control cable

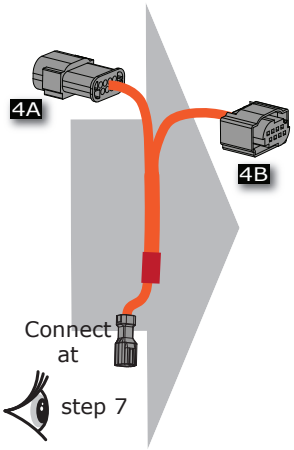

New situation

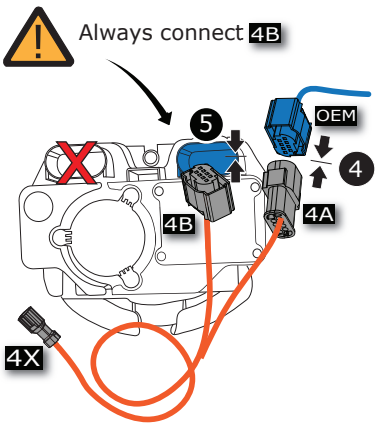

8

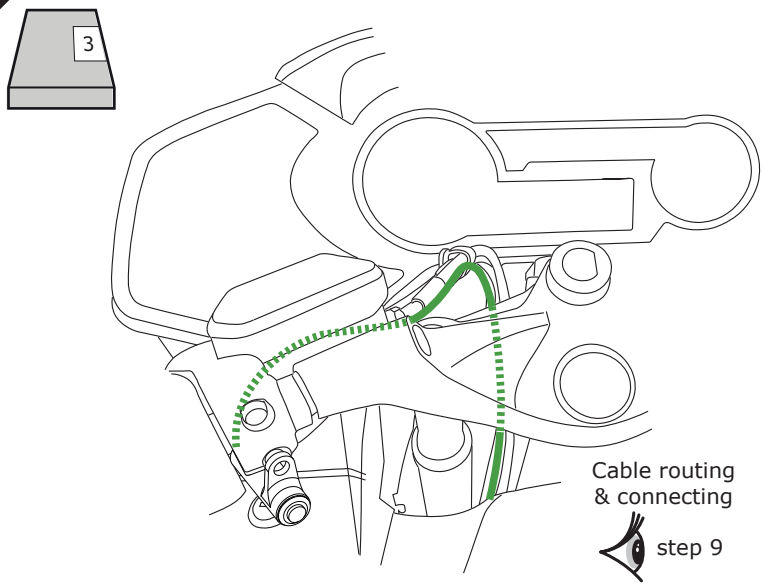
3
Cable routing
& connecting
step 9

OEM
8Nm
6lbf ft
300 km
186 mi
1x

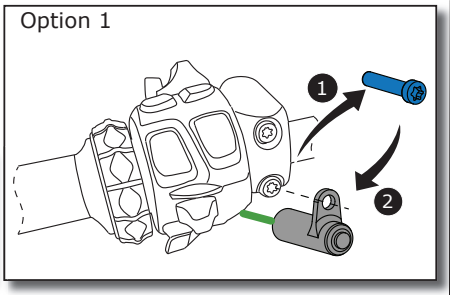
Option 1
1
2

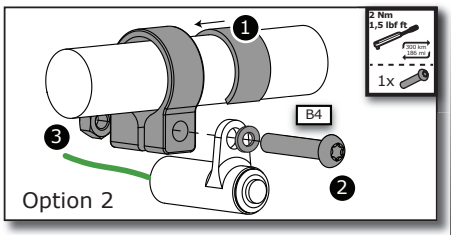
2 Nm
1,5 lbf ft
1x
1
B4
3
2
Option 2

9

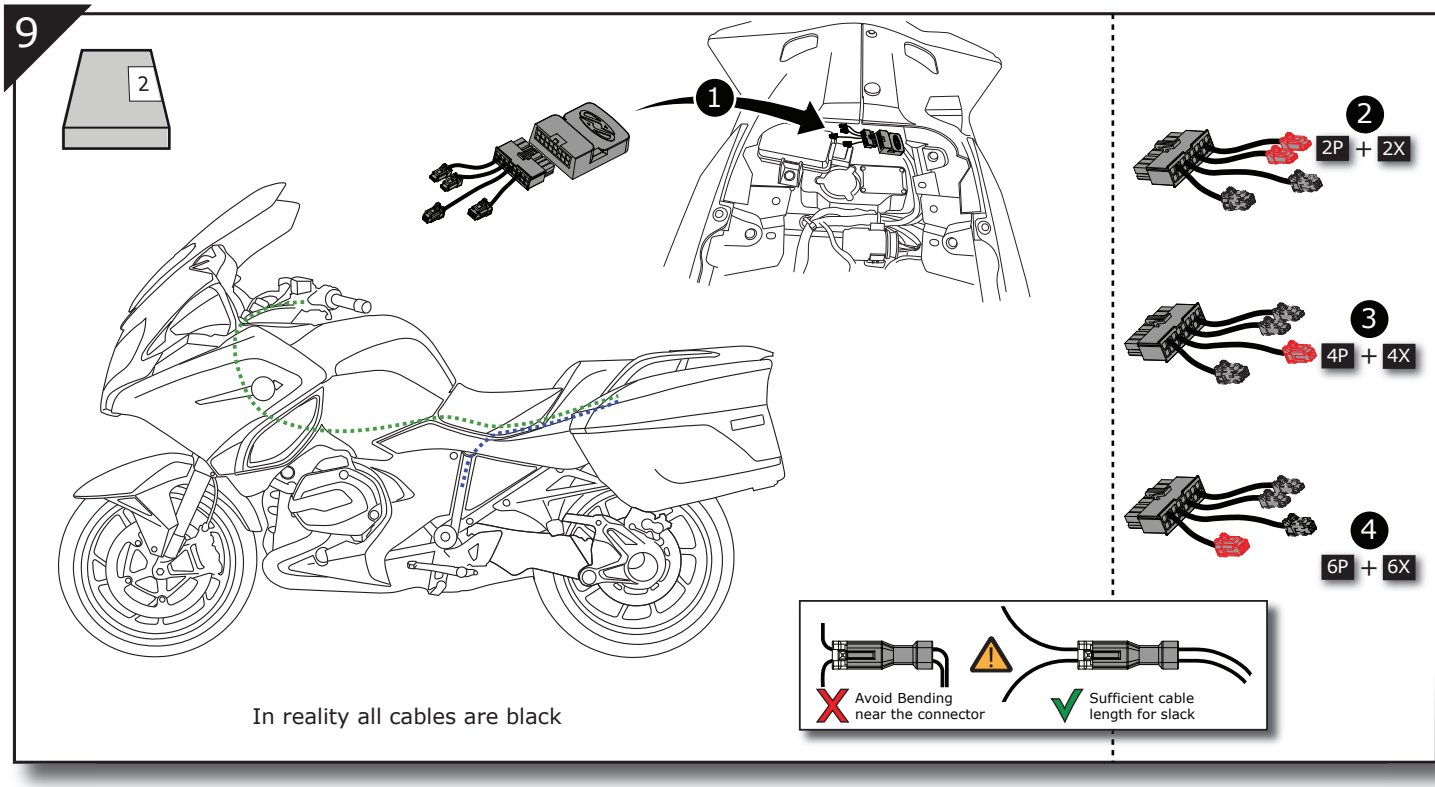
2
1
2
2P + 2X
3
4P + 4X
4
6P + 6X
Avoid Bending
near the connector
Sufficient cable
length for slack
In reality all cables are black

10

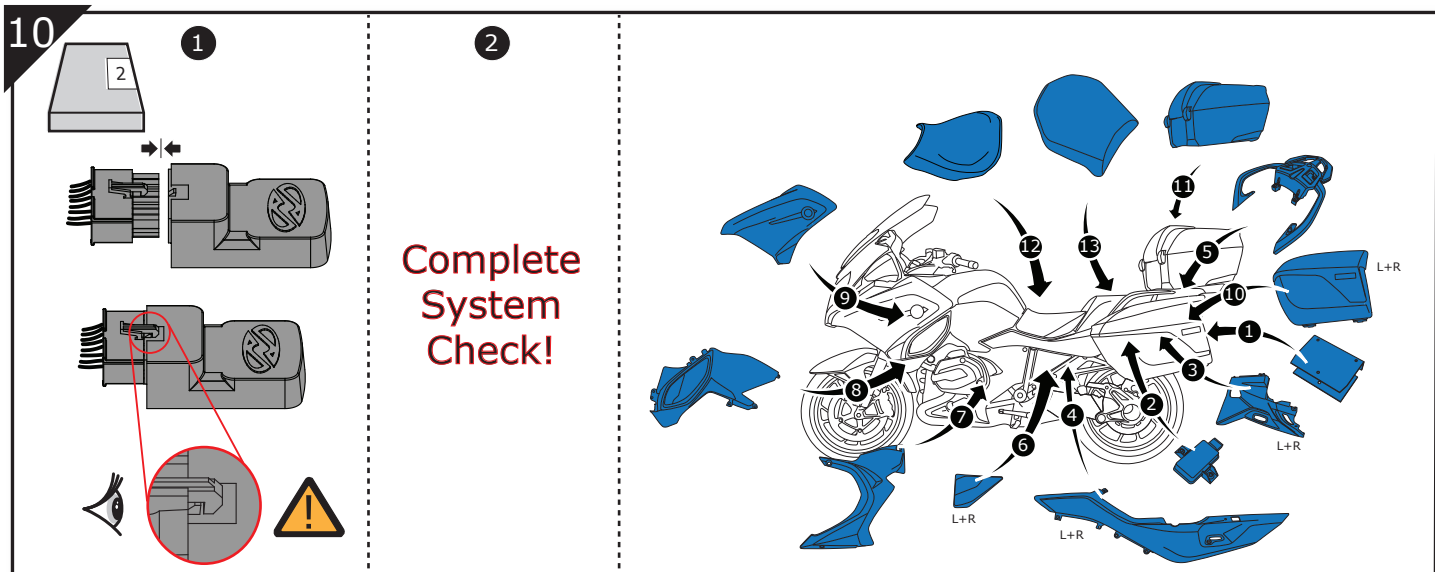
2
1
2
Complete
System
Check!
L+R
L+R
L+R
L+R